GEBÄUDETECHNIK
INTELLIGENT
GEREGELT

ta.co.at

SLM3

STRATIFICATION MODULE

3 kW variant



Installation
Electrical connection

Manual version 1.00

English

Table of contents

Manual version 1.00

Safety requirements 4

Maintenance 5
Disposal 5

Function description 6

Wireless control 6
Control via CORA-DL 6

Installation and connection 8

Dimensioned drawing 8
Suggested installation 8
High limit safety cut-out (HLSC) 9
Sensor installation, CORA-DL interface 9
Electrical connection 10
Heating elements 11
EHS-R heating elements 11
. 11

Wireless system (CORA) 12

Principles 12
Pairing devices 12
Fault codes 12
Relaying wireless signals 12
CORA-DL (cable instead of wireless) 13
Connection 13
Operation 13
Wireless transmission interval 13

Programming example 14

Reset / pairing 15

LED status indicators 15

Possible LED indicators on the immersion heater 16

Firmware update using CAN-EZ3 16

Technical data for the SLM stratification module 17

Pump curve 17

Safety requirements



All installation and wiring work on the devices must be carried out in a zero volt state. The devices may only be opened, connected and commissioned by specialist personnel. When doing so, all local safety requirements must be adhered to.

This device is state of the art and meets all the necessary safety regulations. It may only be used in accordance with the technical data, as well as the safety requirements and regulations listed below. When using the device, also observe all statutory and safety regulations pertaining to the particular application.

- **The stratification module is designed for direct connection to the buffer cylinder. There must be no external differential pressure in the system between the flow and return.**
- Only upright wall mounting is permitted! See the graphic Page 7.
- The safety valve opens at a system pressure of > 4 bar. This valve must be connected to a drain in such a way that any high-pressure water is unable to reach water-sensitive components. The safety valve is only designed to protect the stratification module and does not replace the heating system safety valve.
- Vent the stratification module before commissioning.
- All pipe connections must be tightened and checked to ensure that they are secure and are not leaking before commissioning.
- Connection work and other exposure of the immersion heater PCB should only be carried out in a dry interior rooms.
- It must be possible to isolate the stratification module from the mains, in accordance with local regulations, using an omnipolar isolating facility (plug/socket or 2-pole isolator).
- The stratification module should only be connected to a mains socket using the supplied connection cable and must be protected with a B16A fuse.
-
- No extension cables, mains distributors or cable drums may be used.
- Before starting installation or wiring work on equipment, the stratification module must be completely isolated from the mains power and protected against a restart.
- Never pull on the mains cable.
- Safe operation is no longer possible if the stratification module or connected equipment exhibits visual damage, no longer functions or has been stored for lengthy periods in unsuitable conditions. If this is the case, disable the devices or equipment and secure against unintentional use.
- Heat-sensitive system components (e.g. plastic pipes) must be equipped with safety devices (e.g. thermal high limit safety cut-out for underfloor heating), which prevent overheating in the event of a fault in the controller or another system component.
- At the stratification module, high temperatures occasionally occur during operation, which should be taken into consideration during installation/maintenance work. Never touch the stratification module with damp/wet hands. Insulated footwear is recommended for installation work.
- The stratification module may be active at a high power level for a prolonged period of time. Relevant equipment (e.g. socket) must be able to constantly withstand current flows of up to 16 A.

Maintenance

If treated and used correctly, the device itself will not require any maintenance.

No components relevant to long term accuracy are subject to loading if the device is used correctly. Consequently long term drift is extremely low. The device therefore does not require any maintenance and cannot be adjusted.

The structural characteristics of the device must not be changed during repairs. Spare parts must correspond to the original parts and must be used in accordance with the build version.

Disposal

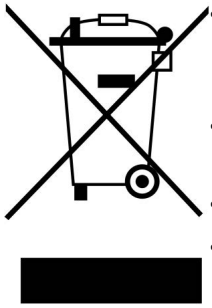

- Devices that are no longer used or cannot be repaired must be disposed of in an environmentally sound manner at an authorised collection point. Under no circumstances must they be treated like normal residual waste.
- On request we can undertake the environmentally sound disposal of devices sold by Technische Alternative.
- Packaging material must be disposed of in an environmentally sound manner.
- Incorrect disposal may significantly damage the environment, as the multitude of materials used necessitates professional separation.

Function description

The SLM3 stratification module operates according to the same principle as a continuous flow heater. It consists of an infinitely variable EHS-R immersion heater (3 kW) and a PWM pump for DHW circulation.

Water circulates continuously along the immersion heater within the stratification module until the set outlet temperature is reached. The pump speed is then increased so that the resulting pressure on the valve opens the line to the buffer cylinder. Only then does hot water enter the buffer, which leaves the stratification of the buffer cylinder undisturbed.

The pump is controlled by the EHS-R. Two PT1000 temperature sensors included in the standard delivery are connected to the EHS-R:

- **S1** is the temperature sensor in the buffer. This sensor is used to measure the shutdown temperature for buffer cylinder charging. This sensor must be installed in the buffer cylinder before commissioning.
- **S2** is the circuit temperature in the SLM itself. The target temperature for charging the buffer is based on this sensor. This sensor is pre-wired and installed at the factory.

The practical minimum performance cannot be specified because it depends on the entire system and on the connection to the cylinder. If a low power level is to be expected, it is recommended to also select a low target temperature to keep the thermal losses low.

At low power levels, the SLM3 continues to stratify at the set target temperature.

Wireless control

For details on the wireless system, see Page 12.

Control via CORA-DL

The full functional scope of the SLM3 can also be achieved via a cable connection.

The immersion heater of the stratification module is connected to the DL bus of a controller (DL master, e.g. CAN-EZ3/UVR16x2/UVR610), where it is programmed under "CORA devices". See Page 13 for details on the connection.

The manual for the relevant controller contains further information about connection, programming and minimum software requirements.

Components

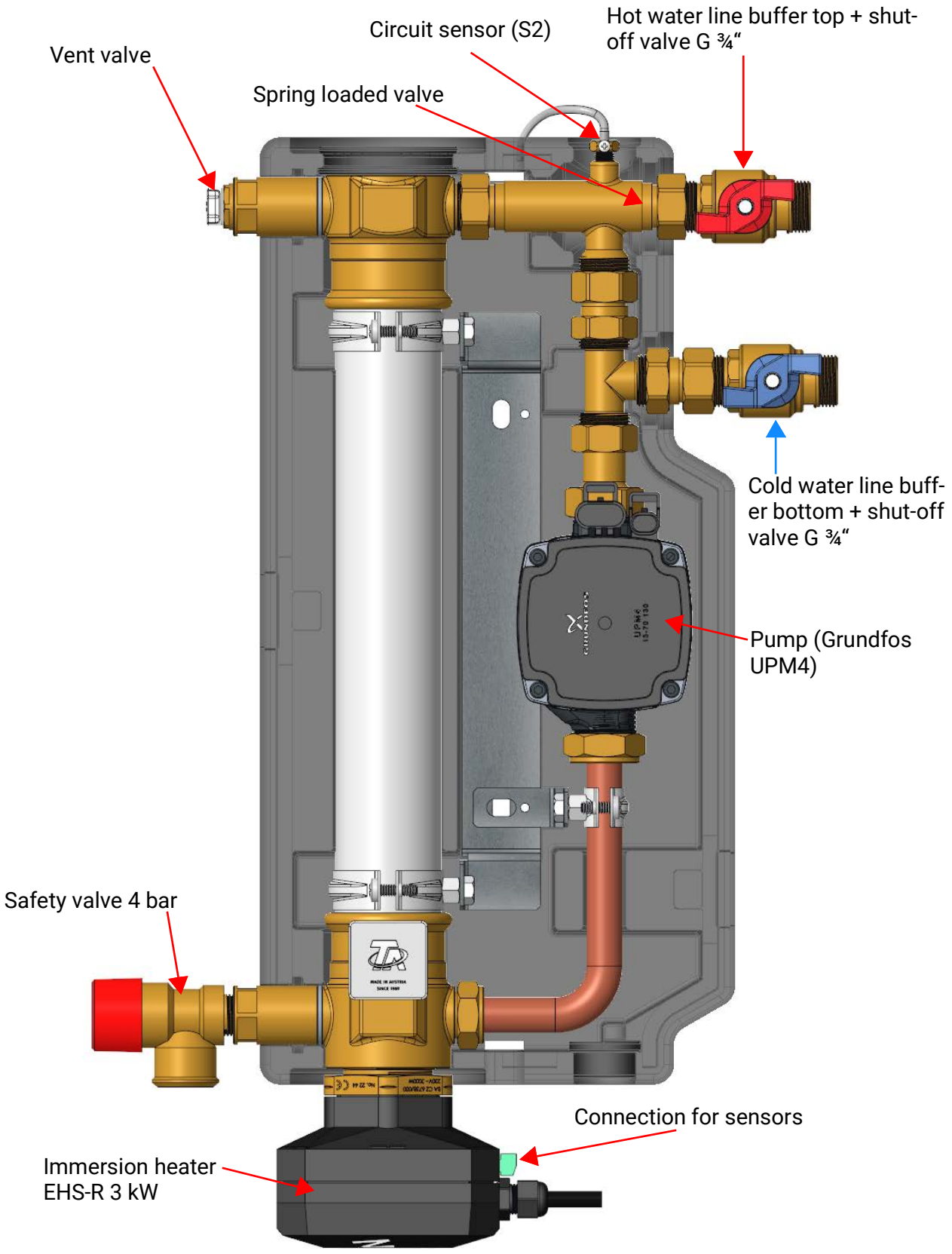
Vent valve
Circuit sensor (S2)
Hot water line buffer top + shut-off valve G ¾“
Spring loaded valve
Cold water line buffer bottom + shut-off valve G ¾“
Pump (Grundfos UPM4)
Safety valve 4 bar
Connection for sensors
Immersion heater EHS-R 3 kW

Installation and connection

Use with DHW cylinders

The stratification module must not come into contact with drinking water!

The stratification module is designed for direct connection to a buffer cylinder in which the same heating water always circulates. Attention must be paid to adequate water quality in accordance with **VDI 2035**. Observe the hydraulic design of the system according to **DIN EN 12828** in order to maintain the water quality.

We do not offer any guarantee or warranty in the case of limescale or galvanic corrosion!

Observe the safety requirements on Page 4!

Before commissioning, the pump must be installed and its cable connected. The cable and pump are included. The pump must be mounted in the direction of flow as shown in the following diagram (downwards):

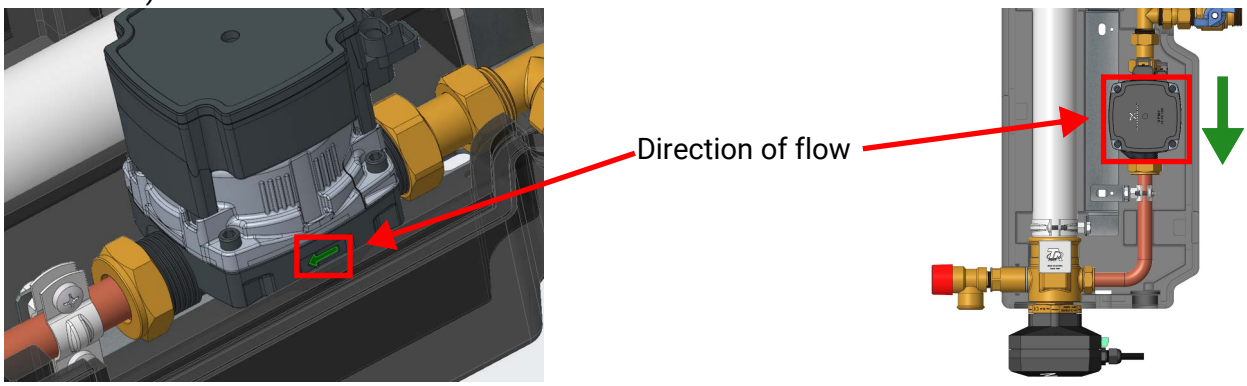

For electrical connection, see Page 10.

Dimensioned drawing

See enclosed sheet.

Suggested installation

A sensor must be installed in the buffer cylinder, connected to the **S1** input of the EHS-R. Sensor S2 is for the circuit temperature and is fitted in the stratification module at the factory.

High limit safety cut-out (HLSC)

The immersion heater of the stratification module is equipped with a high limit safety cut-out.

If a temperature of 95 °C is reached at the HLSC sensor, the immersion heater is deactivated. The immersion heater must then be restarted manually (press the button once or briefly interrupt the power supply). It may only resume heating after a restart and when the HLSC sensor falls back below 75 °C.

The electronics temperature is also monitored. The maximum temperature for this is 75 °C (5 K hysteresis).

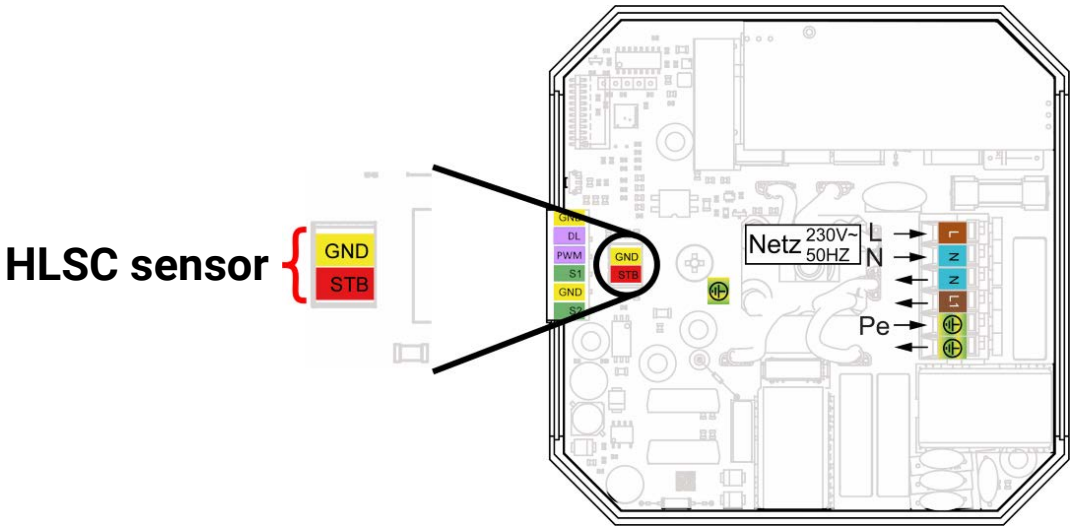

Sensor installation, CORA-DL interface

The EHS-R immersion heater has 2 sensor inputs, which are suitable for the connection of PT1000 sensors. The measurements from these sensors are transmitted via the CORA connection. Next to this is the connection for control via CORA-DL. The earth connections are internally looped.

With the 3 kW EHS-R immersion heater, the two sensor inputs are used at the factory. Sensor S1 is a buffer cylinder sensor, while sensor S2 is installed in the internal circuit of the stratification module.

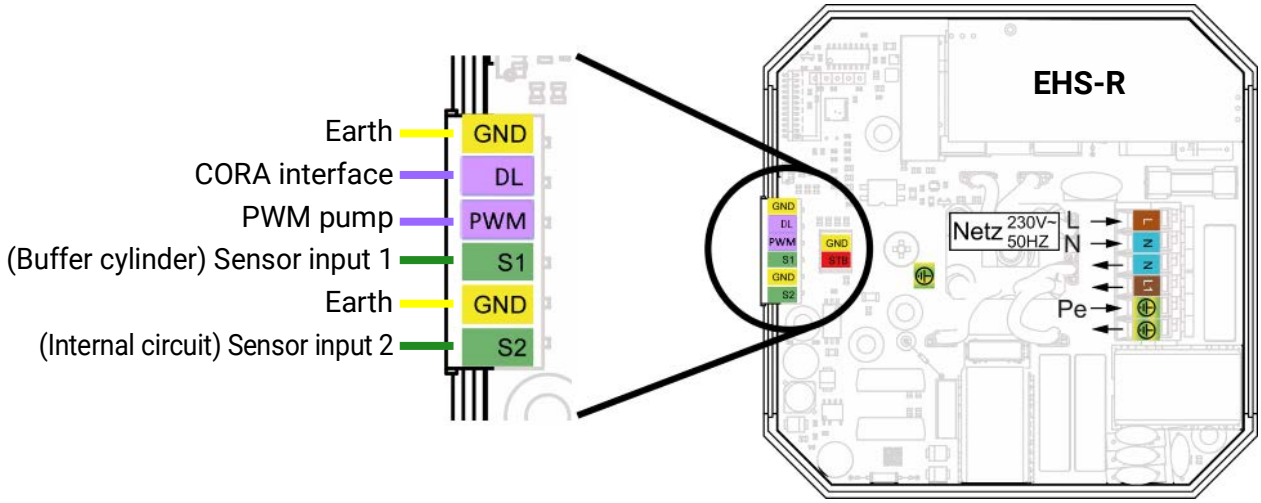

Electrical connection

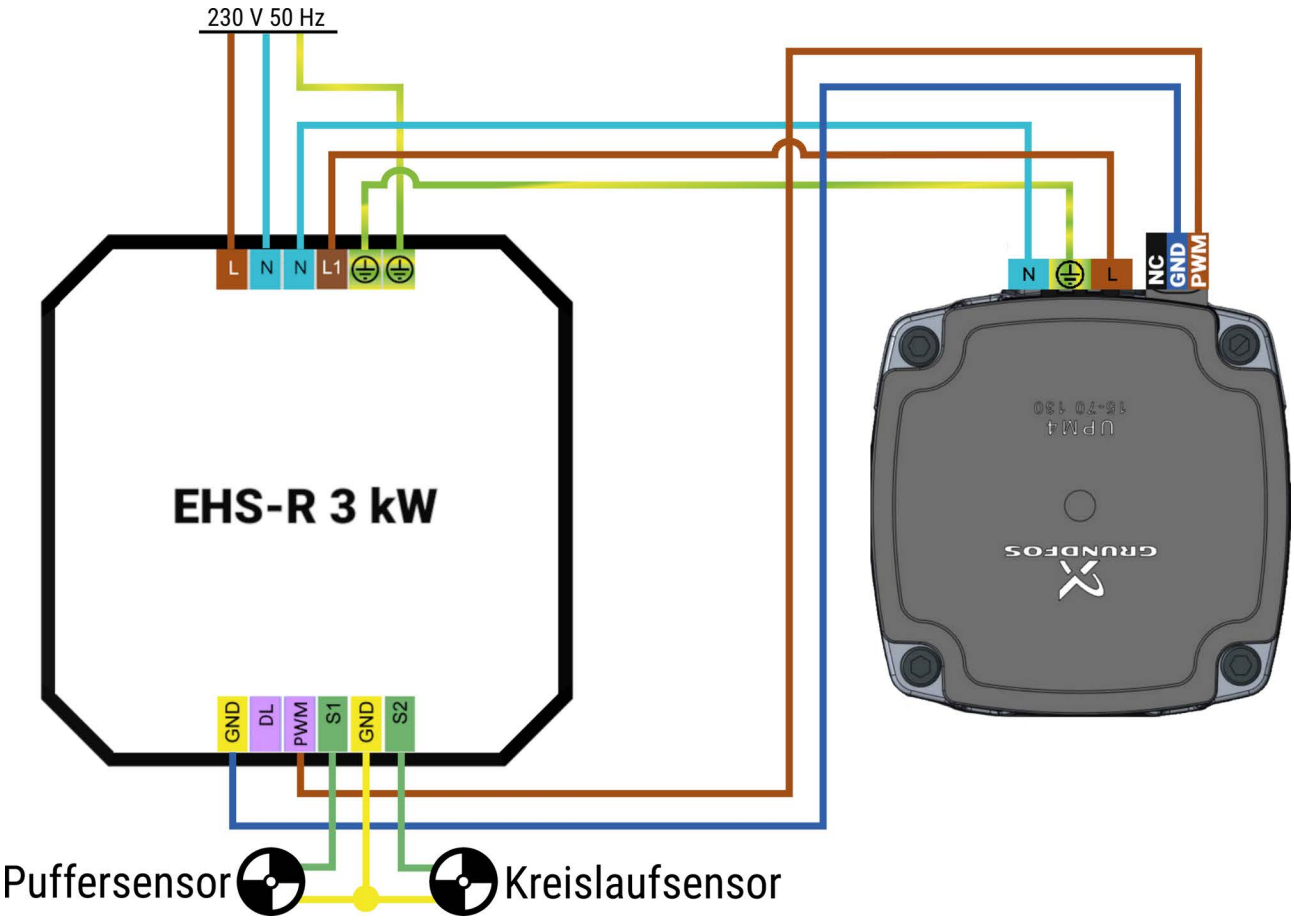

The buffer sensor must be installed before commissioning.

Heating elements

The heating elements are wired at the factory. For any installation/maintenance work, ensure correct wiring/connection.

The heating element wires are routed out of the threaded head and through the PCB and must be connected as explained below. The heating elements and their connections can be identified by the orientation of the screw at the edge of the threaded head.

When installing/removing the immersion heater, do not exert pressure on sensitive components while screwing the thread in/out. The attached fitting next to the immersion heater thread provides a counterhold and must therefore be secured.

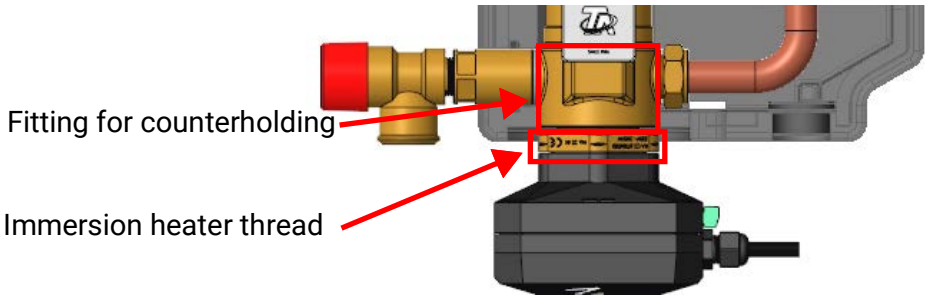

EHS-R heating elements

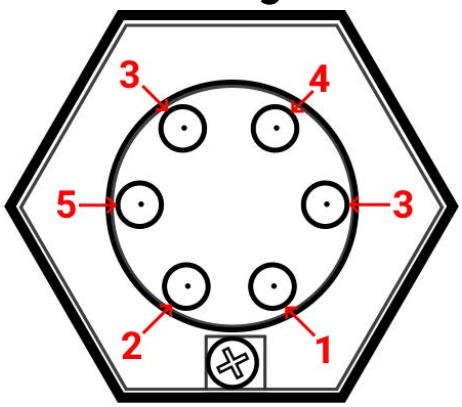

Heating elements

1 750 W not controllable
2 1500 W not controllable
3 750 W controllable
4 Neutral conductor
1500 W not controllable
5 Neutral conductor
750 W not controllable

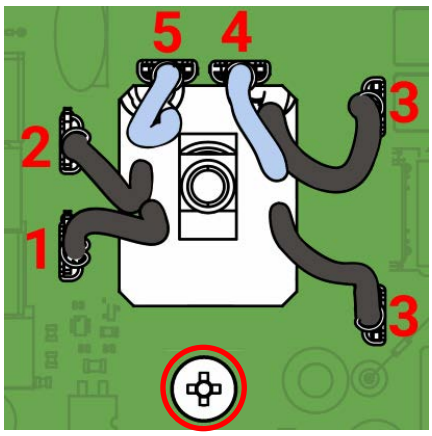

Wireless system (CORA)

Principles

The CORA wireless system comprises at least two devices (e.g. CAN-EZ3 and EHS-R), which communicate with one another, exchange values or send firmware/function data.

The wireless range is around 1000 m outdoors, and typically 30 m in buildings (through approx. 2 walls/ceilings, depending on thickness and material). Up to 3 additional wireless-capable devices can be used as a bridge to enable data to be exchanged under deviating conditions.

Operation with non-CORA devices (RCV-DL, GBS-F and RAS-F) is **not** possible.

Pairing devices

Two steps are carried out to pair two devices:

1. **Allow** pairing on the **target device**
2. **Initiate** pairing on the **control device**

To allow pairing on the immersion heater of the SLM (= target device), **double click**on the button on the immersion heater enclosure (= 2 clicks within 2 seconds). Pairing is then allowed for **5 minutes** (see chapter "**Reset / pairing**").

It is necessary to enter the CORA ID of the EHS-R on the control device for pairing.

The pairing process on other devices (*control device*) can be found in the corresponding operating instructions.

If a CAN-EZ3A and an SLM3 in the **ATON** set were purchased together, they have already been paired at the factory.

Fault codes

If faulty operation is detected on the immersion heater, the corresponding fault code is transmitted under *CORA devices > Output variables* . A number is assigned to each fault status. The sum of the codes of all current faults is output under "Fault codes".
Example: A fault code of **6** would mean that faults **2 and 4** are active.

1	Faulty circuit breaker
2	Excess temperature at HLSC sensor
4	Excess temperature at PCB

Relaying wireless signals

Wireless-capable devices can relay signals from other devices. All required settings for this are carried out at the device that transmits the signal to be relayed.

The immersion heater can also be used to relay wireless signals from other devices. If the immersion heater receives signals via a relay, it automatically returns data via the same relay. No settings are therefore required for the relay on the immersion heater.

CORA-DL (cable instead of wireless)

The immersion heater can also be controlled via a cable connection. This replaces all functions of the CORA wireless system. The immersion heater **cannot be run with a wireless and a cable connection** at the same time.

Connection

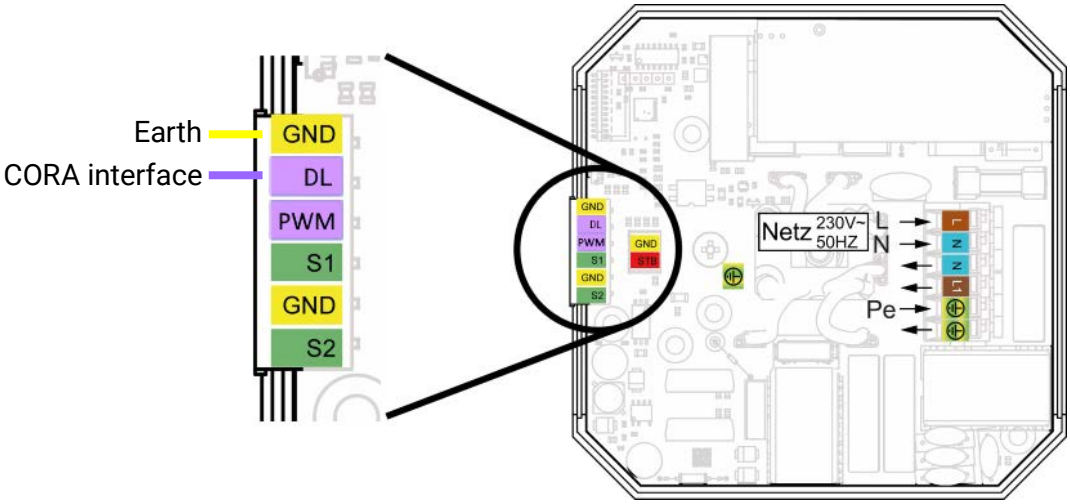

It is important to note the polarity. The DL connection on the immersion heater is connected to **DL** on the controller, and **GND** to **GND.**

Operation

Operation does not differ between CORA wireless and CORA-DL. Operation is described in the instructions of the master device (e.g. CAN-EZ3).

Wireless transmission interval

The immersion heater sends values (incl. temperature measurements) every 50 seconds. Each time the controller (e.g. CAN-EZ3) sends values to the immersion heater, the immersion heater also returns its values.

Programming example

This is merely an explanation of the programming settings that are generally necessary for using the stratification module. The CAN-EZ3A included in the ATON-SLM set is pre-programmed. The factory settings are available to download from: www.ta.co.at

The system value **Total active power** is linked to *Power from the grid*.

A set power level of approx. –200 W should be specified.

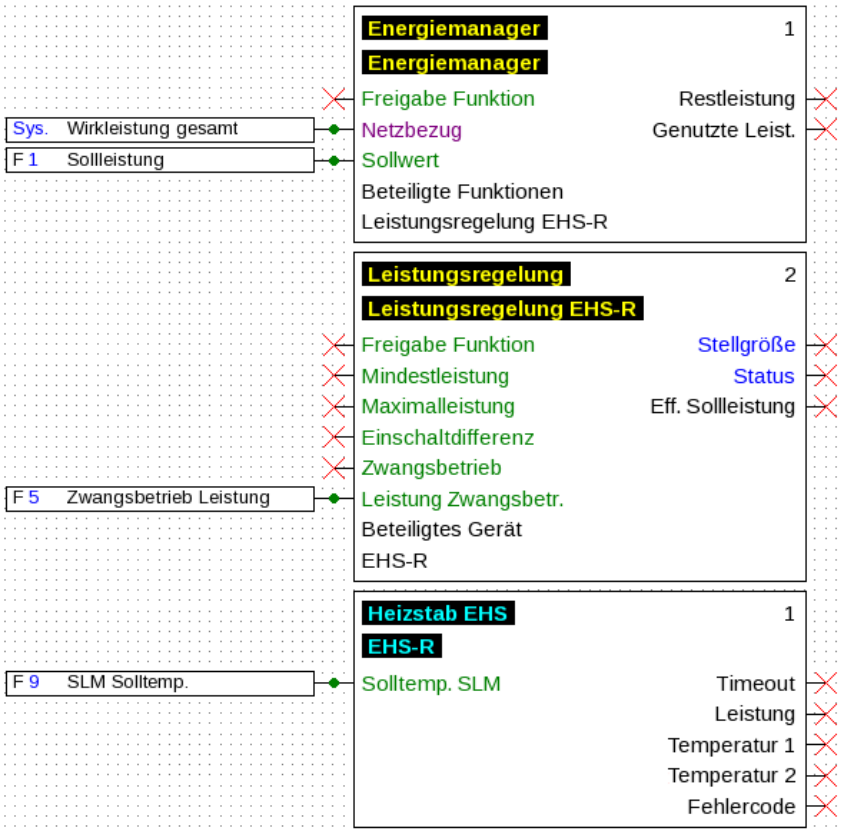

Reset / pairing

The button is pressed using a narrow-tip pen (gently push the button).



Double click (two clicks within 2 seconds)	Allow pairing for 5 minutes (see chapter "Wireless system") The LED flashes green rapidly for 3 seconds to confirm.
10-second click	Total reset (hold until the LED shows a green light for 1 second) After a total reset, pairing is allowed until the first successful pairing attempt, with no time limit.
Single click	Reset (software restart)

LED status indicators



Possible LED indicators on the immersion heater

Control indicator	Explanation
Green, steady light	Set power **0 W** is preset wirelessly or via CORA-DL **or** Set power via PWM input **> 0 W** but **< 40 W**
Green, flashing slowly	Set power **> 0 W** is preset wirelessly or via CORA-DL
Green, flashing quickly	Set power **> 0 W** is preset via PWM input
	If the LED flashes rapidly for only 3 seconds, pairing has been permitted via the button.
Orange/red alternately, flashing slowly	Fuse faulty
Orange, steady light	No CORA signal (2 min. timeout) or no PWM signal received.
Orange, flashing slowly	Immersion heater excess temperature (HLSC > 95 °C) – restart required (via button or briefly cut the power supply)
Orange, flashing quickly	Enclosure/electronics excess temperature (> 75 °C)
Red, steady light	Internal fault
Red, flashing slowly	Wireless chip error
Red, flashing quickly	EEPROM error

Firmware update using CAN-EZ3

The firmware of the EHS-R immersion heater can be updated via a CAN-EZ3 that is connected wirelessly (see chapter "Wireless System").

The firmware file of the EHS-R must be located on the SD card of the CAN-EZ3.

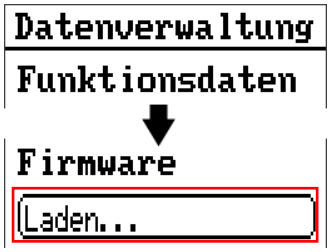

In the **Data admin** menu, navigate down to **Firmware**. Select **Load...** below this.

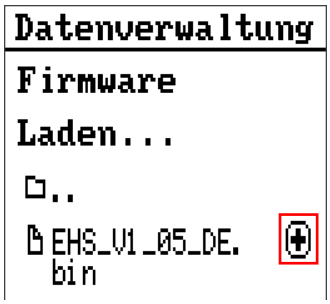

Select the plus symbol next to the required firmware file (not the file itself).

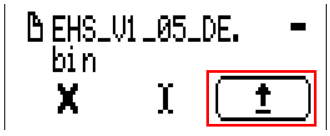

In the toolbar that appears, select the arrow symbol for sending data.

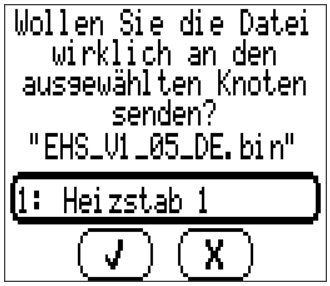

Select the corresponding device from the list (only paired CORA devices are displayed) and confirm the entry with ✓.

The firmware update starts. It may take a few minutes.

Technical data for the SLM stratification module

Power consumption	Max. 3000 W (depending on specified set power)
Rated voltage	230 V / 50 Hz
Immersion heater surface heating power	< 8 W/cm^2
Electronics power consumption	Typ. ≤ 1 W
Immersion heater inactive length (distance from threaded head, which is not heated)	120 mm (± 10 mm)
Immersion heater thread	G 1 ½“ / AF 65
Safety valve	Pressure drop at > 4 bar
Flow rate range	Up to 1000 l/h, may be lower depending on external piping/cylinder connection
Nominal capacity	Approx. 0.9 l
Immersion heater fuse	6.3A fast-acting (only for adjustable heating element and electronics)
Cable cross-section, mains connection	3 x 1.5 mm^2
Target temperature setting range	20 - 70 °C
Dimensions	See enclosed sheet
Wireless system frequency	868.5 MHz
Wireless system transmission power	+10 dBm
Sensors	PT1000
DL bus load (only for CORA-DL)	10 %
Heating element material	Stainless steel V4A 1.4571
Pump	**Grundfos UPM4** 15-70 130
Temperature sensors	PT1000

Pump curve

(1 kPa = 10 mbar)



Subject to technical modifications as well as typographical and printing errors. These instructions are only valid for devices with the corresponding firmware version. Our products are subject to constant technical advancement and further development. We therefore reserve the right to make changes without prior notice.

© 2026

EU Declaration of conformity

Document-No. / Date:	TA26001, 13.07.2026
Manufacturer:	Technische Alternative RT GmbH
Address:	A-3872 Amaliendorf, Langestraße 124

This declaration of conformity is issued under the sole responsibility of the manufacturer.

Product name:	SLM3, SLM9
Product brand:	Technische Alternative RT GmbH
Product description:	Stratification module

The object of the declaration described above is in conformity with Directives:

2014/35/EU	Low voltage standard
2014/30/EU (11/09/2018)	Electromagnetic compatibility
2011/65/EU (01/10/2022)	RoHS Restriction of the use of certain hazardous substances

Employed standards:

EN 60730-1:2021-06	Automatic electrical controls - Part 1: General requirements
EN IEC 61000-6-3:2022-06	Electromagnetic compatibility (EMC) - Part 6-3: Generic standards - Emission standard for equipment in residential environments
EN IEC 61000-6-2:2019-11	Electromagnetic compatibility (EMC) - Part 6-2: Generic standards - Immunity standard for industrial environments
EN IEC 63000:2019-05	Technical documentation for the assessment of electrical and electronic products with respect to the restriction of hazardous substances
EN 300220-2:2018-09	Short Range Devices (SRD) operating in the frequency range 25 MHz to 1 000 MHz - Part 2: Harmonised Standard for access to radio spectrum for non specific radio equipment
EN 301489-1:2020-06	Electromagnetic compatibility for radio equipment and services - Part 1: Common technical requirements
EN 301489-3:2019-08	Electromagnetic compatibility (EMC) - Standard for radio equipment and services - Part 3: Specific conditions for short range devices (SRD) for operation in the 9 kHz to 246 GHz frequency range

Position of CE - label: On packaging, manual or type label

CE

Issuer:	Technische Alternative RT GmbH A-3872 Amaliendorf, Langestraße 124

This declaration is submitted by



Dipl.-Ing. Andreas Schneider, General manager,
13.07.2026

This declaration certifies the agreement with the named standards, contains however no warranty of characteristics.
The security advices of included product documents are to be considered.

Warranty conditions

Note: The following warranty conditions do not in any way limit the legal right to warranty, but rather expand your rights as a consumer.

1. The company Technische Alternative RT GmbH provides a one-year warranty from the date of purchase for all the devices and parts which it sells. Defects must be reported immediately upon detection and within the guarantee period. Technical support knows the correct solution for nearly all problems. In this respect, contacting us immediately will help to avoid unnecessary expense or effort in troubleshooting.

2. The warranty includes the free of charge repair (but not the cost of on site troubleshooting, removal, refitting and shipping) of operational and material defects which impair operation. In the event that a repair is not, for reasons of cost, worthwhile according to the assessment of the Technische Alternative company, the goods will be replaced.

3. Not included is damage resulting from the effects of over-voltage or abnormal ambient conditions. Likewise, no warranty liability can be accepted if the device defect is due to: transport damage for which we are not responsible, incorrect installation and assembly, incorrect use, disregard of operating and installation instructions or incorrect maintenance.

4. The warranty claim will expire, if repairs or actions are carried out by persons who are not authorised to do so or have not been so authorised by us or if our devices are operated with spare, supplementary or accessory parts which are not considered to be original parts.

5. The defective parts must be sent to our factory with an enclosed copy of the proof of purchase and a precise description of the defect. Processing is accelerated if an RMA number is applied for via our home page www.ta.co.at. A prior clarification of the defect with our technical support is necessary.

6. Services provided under warranty result neither in an extension of the warranty period nor in a resetting of the warranty period. The warranty period for fitted parts ends with the warranty period of the whole device.

7. Extended or other claims, especially those for compensation for damage other than to the device itself are, insofar as a liability is not legally required, excluded.

Legal notice
These assembly and operating instructions are protected by copyright.
Use outside the copyright requires the consent of the company Technische Alternative RT GmbH.
This applies in particular to reproductions, translations and electronic media.

Technische Alternative RT GmbH
A-3872 Amaliendorf, Langestraße 124
Tel.: +43 (0)2862 53635 Fax +43 (0)2862 53635 7
E-Mail: mail@ta.co.at --- www.ta.co.at ---
CE
©2026